HEADROOM REQUIRED

OPENING HEIGHT	VERTICAL HEADROOM	HORIZONTAL HEADROOM
THRU 7'-4"	15 ½"	17"
OVER 7'-4" THRU 8'-8"	16"	17 ½"
OVER 8'-8" THRU 10'-0"	17"	18 ½"

NOTES:

1. OPERATION TYPE MAY BE PUSH-UP OR RIGHT HAND INTERNAL ELECTRIC.
2. FOR CRITICAL FITS DUE TO REDUCED AVAILABLE HEADROOM OR SIDEROOM CLEARANCES, CONSULT FACTORY.
3. CLEARANCES SHOWN ARE MAXIMUMS. LESSER CLEARANCES MAY BE POSSIBLE.
4. UNLESS OTHERWISE NOTED, LOCKING SHALL BE BY SINGLE MINI LATCH BOLTED TO CURTAIN AND SUITABLE FOR DOUBLE PADLOCKS AND SINGLE CYLINDER LOCK BY OTHERS.
5. LATCH COVER IS YELLOW ZINC (STAINLESS STEEL OPTIONAL) AND SLIDE IS MAGNETIC STAINLESS.
6. SERIES 281CI IS AN INSULATED SERIES 281C.
7. CURTAIN FINISH SHALL BE SILICONE POLYESTER PRE-PAINT OVER GALVANIZED GRADE 80 STEEL.
8. GUIDES, BRACKETS, BOTTOM BAR ANGLE AND HEAD STOPS ARE ZINC COATED.
9. MAXIMUM OPENING SIZE: 10'-0" X 10'-0".
10. RAIN LIP CLEARANCE DIMENSION OUTSIDE OF GUIDE = 4" MINIMUM
11. 40" MAX HOLE SPACING (HOLES SPACING VARIES BY LOCATION OF MANUFACTURING)

MINI LATCH

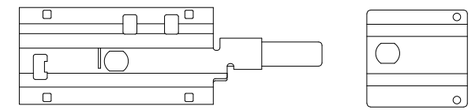

MINI LATCH CYLINDER LOCK BACK PLATE (ONLY USED WITH CYLINDER LOCK)

MINI STOP CLIP

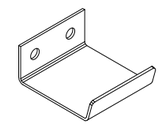

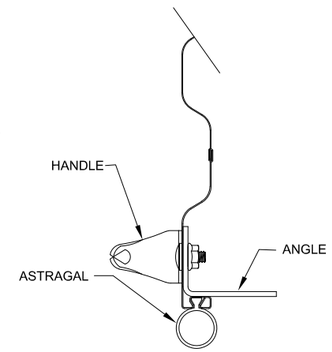

BOTTOM BAR ASSEMBLY

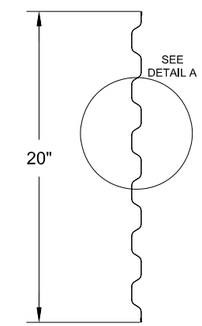

26 GA CURTAIN PANEL DETAIL

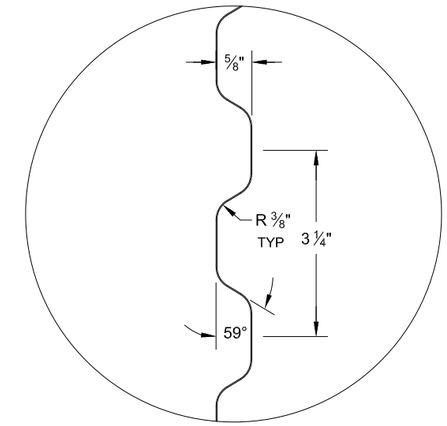

DETAIL A

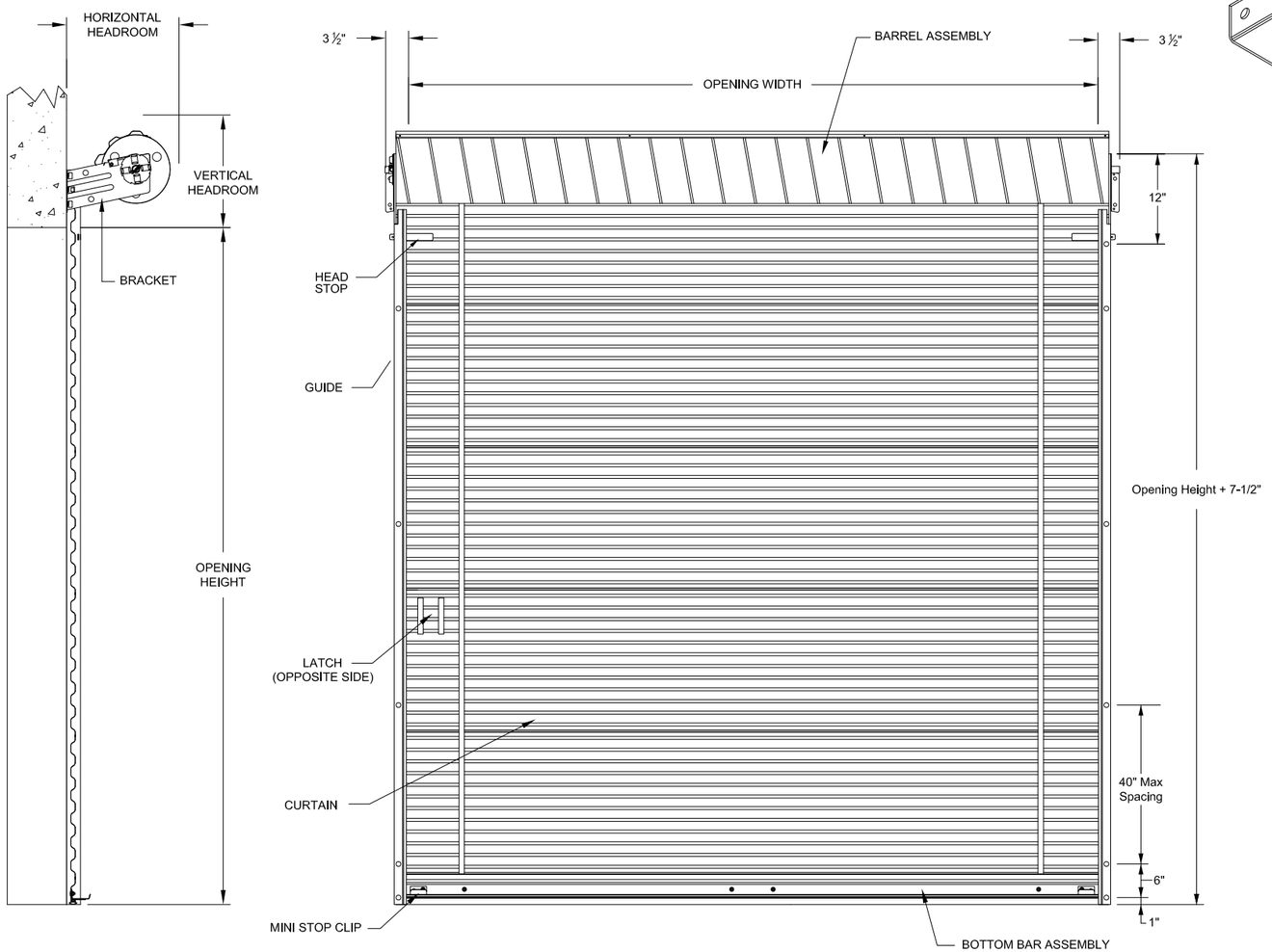

END VIEW

INSIDE ELEVATION

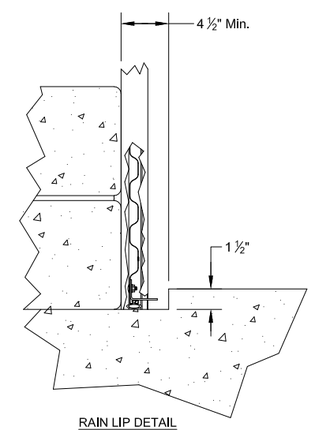

RAIN LIP DETAIL

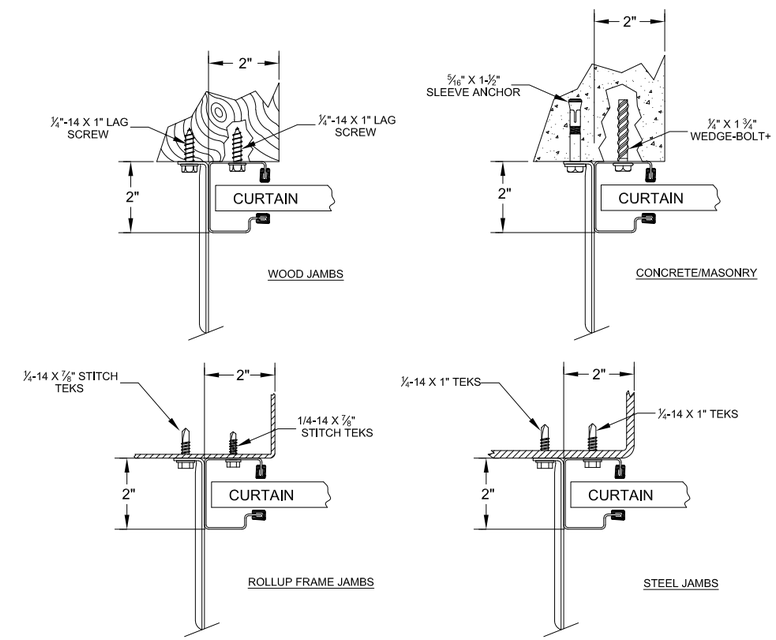

18 GA GUIDE & BRACKET MOUNTING DETAIL

DRAWING #: 814001-0003

A.K. 02-25-2025

MINI DOOR SERIES: 281C

FACTORY ORDER NUMBER	DOOR SERIES		QTY	OPENING SIZE		JAMB TYPE			OUTSIDE CURTAIN COLOR	OPERATION		WEATHERSTRIP			ADDED OPTIONS
	281C	281CI		WIDTH	HEIGHT	STEEL	CONC./ MAS	WOOD		PUSH-UP	ELECTRIC	TOP	HEADER	SIDE	

CUSTOMER NUMBER:		DATE:
CUSTOMER NAME:		CONTACT:
PROJECT NAME:		
PROJECT LOCATION:		
PLANT:		SALESPERSON:
DRAWN BY:	DATE:	JANUS INTERNATIONAL GROUP, LLC. 135 JANUS INTERNATIONAL BLVD. TEMPLE, GA 30179-4435 770-562-2850 FAX: 770-562-2264
DRAWING NUMBER:	SHT: OF:	